BlackBerry Enterprise Server

Placing the BlackBerry Router in the DMZ

Version: 5.0 | Service Pack: 3

Security Note

BlackBerry

Published: 2011-03-07
SWD-1395142-0307061517-001

Contents

1 BlackBerry Router ... 3
Opening a direct connection between a device and a BlackBerry Router ... 3
Advantages of using the BlackBerry Router protocol ... 4
Process flow: Authenticating a BlackBerry device with the BlackBerry Enterprise Server using the BlackBerry Router protocol ... 4
Closing a direct connection between a BlackBerry device and BlackBerry Router ... 5
Installing BlackBerry Router instances to create a chain ... 5
BlackBerry Router connection types and port numbers ... 6

2 Installing a BlackBerry Router ... 9
Installing a standalone BlackBerry Router ... 9
Installing the BlackBerry Router in the DMZ ... 9
System requirements: BlackBerry Router ... 10
Determining which Windows account to use to install and run a BlackBerry Router ... 10
Install a standalone BlackBerry Router ... 10
Test the connection from the BlackBerry Router to the BlackBerry Infrastructure ... 11

3 Connecting to a BlackBerry Router ... 12
Permit a BlackBerry Enterprise Server to connect to a remote BlackBerry Router ... 12
Connect a BlackBerry Enterprise Server to a remote BlackBerry Router ... 12

4 Configure the BlackBerry Device Manager to use a BlackBerry Router inside the firewall ... 14

5 Connecting the BlackBerry Device Manager to the BlackBerry Router using a VPN ... 15

6 Configuring the BlackBerry Router to not use port 3101 to connect to the BlackBerry Dispatcher ... 16

7 BlackBerry Router high availability ... 17
BlackBerry Router high availability in a small-scale environment ... 17
BlackBerry Router high availability in a large-scale environment ... 17
Best practice: Planning for BlackBerry Router high availability ... 18
Scenario: What happens after the BlackBerry Router stops responding ... 19
Create a BlackBerry Router pool for high availability ... 20

8 Related resources ... 22

9 Glossary ... 23

10 Provide feedback ... 25

11 Legal notice..... 26

BlackBerry Router

1

The BlackBerry® Router connects to the wireless network and sends data to and receives data from the BlackBerry® Infrastructure on behalf of the BlackBerry® Enterprise Server. The BlackBerry Router also sends data to and receives data from BlackBerry devices that are connected to the BlackBerry® Device Manager or a Wi-Fi® network. The BlackBerry Device Manager is included with the BlackBerry® Device Software, BlackBerry® Web Desktop Manager, and BlackBerry Administration Service.

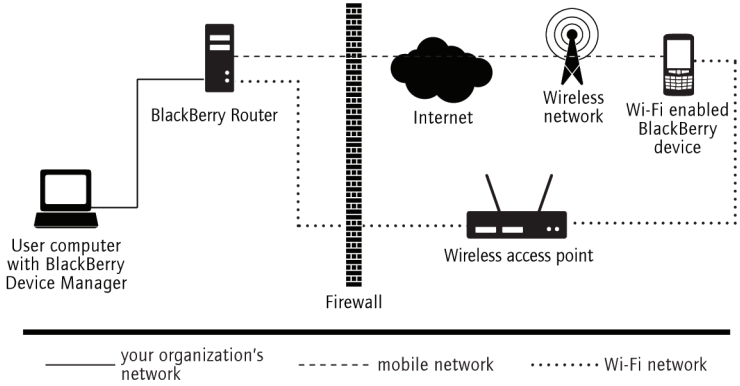

When the BlackBerry Enterprise Server detects a BlackBerry Router, it identifies the IP address of the computer that hosts the BlackBerry Router and writes the IP address to the BlackBerry Configuration Database. When BlackBerry device users activate devices that are running BlackBerry Device Software 4.0 or later, the BlackBerry Router sends the IP address to the devices in a service book.

If you change the IP address of the computer that hosts the BlackBerry Router, devices detect the change automatically. Users do not need to reconnect devices to the BlackBerry Device Manager to receive the new IP address and a new service book. However, a delay occurs before devices detect the change. During the delay, devices cannot connect to the BlackBerry Device Manager or a Wi-Fi network.

The BlackBerry Router supports the use of multiple network cards on users' computers, which is also known as multihoming.

Opening a direct connection between a device and a BlackBerry Router

A BlackBerry® device can use the BlackBerry Router protocol to bypass the SRP-authenticated connection to the BlackBerry® Infrastructure and open a direct connection to a BlackBerry Router. The device can open a direct connection to the BlackBerry Router if a BlackBerry device user connects the device to a computer that hosts the BlackBerry® Device Manager. A device can also open a direct connection to the BlackBerry Router over an enterprise Wi-Fi® network using port 4101. A direct connection between the BlackBerry Router and device is referred to as least-cost routing because it eliminates the cost of using the BlackBerry Infrastructure.

Before the BlackBerry® Enterprise Server and device can send any data to each other, the device must authenticate with the BlackBerry Enterprise Server by verifying the device transport key. The device opens an authenticated connection to the BlackBerry Router after the device authenticates with the BlackBerry Enterprise Server. The BlackBerry Router does not know the value of the device transport key that the BlackBerry Enterprise Server and device share.

If the device connects to the BlackBerry Router over the enterprise Wi-Fi network, after the BlackBerry Router opens an authenticated connection, the BlackBerry Router communicates with the device over the enterprise Wi-Fi network using port 4101. If you do not configure the BlackBerry Router to connect only to a Wi-Fi network, the BlackBerry Router verifies that the PIN belongs to a device that is registered with the BlackBerry Infrastructure.

If you want the BlackBerry Router and device to use the BlackBerry Router protocol, you can consider installing the BlackBerry Router on a computer that is separate from the computer that hosts the BlackBerry Enterprise Server to prevent a potentially malicious attacker from having direct access to the computer that hosts the BlackBerry Enterprise Server. If the BlackBerry Router is placed in the DMZ, you must open port 4101 on the internal-facing firewall to permit communication between the BlackBerry Device Manager and BlackBerry Router.

Advantages of using the BlackBerry Router protocol

You can use the BlackBerry® Router protocol to experience the following advantages:

- You or a BlackBerry device user can connect multiple BlackBerry devices to a single computer that hosts a BlackBerry® Device Manager.
- The BlackBerry Router rejects connections from devices that the BlackBerry® Enterprise Server has not authenticated.
- A device can provide all email messaging services and data services using the BlackBerry Router protocol except for activation over the wireless network. After a user starts the activation process over the wireless network, the user can connect the device to a computer that hosts the BlackBerry Device Manager to complete the activation process.

Process flow: Authenticating a BlackBerry device with the BlackBerry Enterprise Server using the BlackBerry Router protocol

1. A user connects a BlackBerry® device to a computer that hosts the BlackBerry® Device Manager or connects a BlackBerry device to an enterprise Wi-Fi® network.
2. The BlackBerry® Enterprise Server and BlackBerry device use the BlackBerry Router protocol to verify that the BlackBerry device knows the device transport key.

   The BlackBerry Router protocol uses two runs of the elliptic curve version of the Schnorr identification scheme to provide mutual authentication between the BlackBerry Enterprise Server and BlackBerry device.
3. The BlackBerry Router opens an authenticated connection.

Closing a direct connection between a BlackBerry device and BlackBerry Router

If a user disconnects a BlackBerry® device from a computer that hosts the BlackBerry® Device Manager, closes the BlackBerry Device Manager, or disconnects the BlackBerry device from an enterprise Wi-Fi® network, the BlackBerry device restores the connection to the BlackBerry® Infrastructure over the wireless network automatically. The BlackBerry® Enterprise Server and BlackBerry Router use the BlackBerry Router protocol to close the authenticated connection to the BlackBerry device. The BlackBerry Router protocol is designed to permit only an authenticated party to close the connection. The BlackBerry Router uses a single execution of the Schnorr identification scheme to authenticate the close command that the BlackBerry Enterprise Server sends to the BlackBerry Router.

Installing BlackBerry Router instances to create a chain

You can install multiple BlackBerry® Router instances that are separated by firewalls in your organization's environment so that they connect to each other and form a chain. The first BlackBerry Router in the chain forwards data packets to the next BlackBerry Router in the chain.

For example, you can install a BlackBerry Router with the BlackBerry® Enterprise Server and a remote BlackBerry Router in the DMZ. BlackBerry devices can access the BlackBerry Router that you install with the BlackBerry Enterprise Server using the BlackBerry® Device Manager to support least-cost routing. Devices can connect to the remote BlackBerry Router in the DMZ using the enterprise Wi-Fi® network.

Devices can connect to any BlackBerry Router instance in the chain to authenticate and communicate with the BlackBerry Enterprise Server. The BlackBerry Enterprise Server pushes the IP addresses of all the BlackBerry Router instances to the devices using service books.

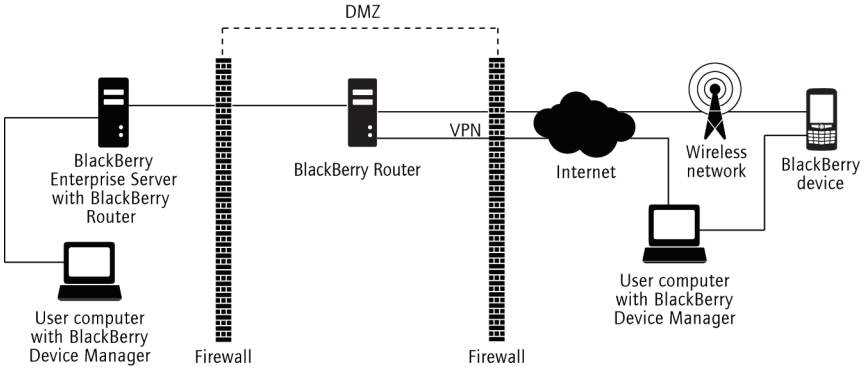

BlackBerry Router connection types and port numbers

Item	Connection type	Default port number	UI where you can configure the connection
incoming data connections from the BlackBerry® Dispatcher that use SRP	TCP	3101	BlackBerry Configuration Panel Windows® registry • On a 32-bit version of Windows: HKEY_LOCAL_MACHINE\SOFTWARE\Research In Motion\BlackBerryRouter\ServicePort • On a 64-bit version of Windows: HKEY_LOCAL_MACHINE\SOFTWARE\WOW6432Node\Research In Motion\BlackBerryRouter\ServicePort
outgoing data connections to the BlackBerry® Infrastructure that use SRP	TCP	3101	BlackBerry Configuration Panel Windows registry • On a 32-bit version of Windows: HKEY_LOCAL_MACHINE\SOFTWARE\Research In Motion\BlackBerryRouter\TcpPort • On a 64-bit version of Windows: HKEY_LOCAL_MACHINE\SOFTWARE\WOW6432Node

Item	Connection type	Default port number	UI where you can configure the connection
			\Research In Motion \BlackBerryRouter \TcpPort
incoming data connections from, and outgoing data connections to, BlackBerry devices that use the BlackBerry® Device Manager to bypass the wireless network and devices that connect using Wi-Fi®	TCP	4101	BlackBerry Device Manager Windows registry • On a 32-bit version of Windows: HKEY_LOCAL_MACHINE\SOFTWARE \Research In Motion \BlackBerryRouter \DevicePort • On a 64-bit version of Windows: HKEY_LOCAL_MACHINE\SOFTWARE \WOW6432Node \Research In Motion \BlackBerryRouter \DevicePort
outgoing syslog connections to the SNMP agent	UDP	4071	Windows registry • On a 32-bit version of Windows: HKEY_LOCAL_MACHINE\SOFTWARE \Research In Motion \BlackBerrySNMPAgent\Parameters \UDPPort • On a 64-bit version of Windows: HKEY_LOCAL_MACHINE\SOFTWARE \WOW6432Node \Research In Motion

Item	Connection type	Default port number	UI where you can configure the connection
			\BlackBerrySNMPAgent\Parameters\UDPPort

Installing a BlackBerry Router

2

Installing a standalone BlackBerry Router

You can install the BlackBerry® Router by itself on a remote computer to route data between the BlackBerry® Infrastructure and one or more BlackBerry® Enterprise Server instances that you configure to use the same SRP address. You can install the BlackBerry Router on a remote computer if you want to install the BlackBerry Router in the DMZ, or you can install multiple BlackBerry Router instances on remote computers for high availability. The BlackBerry Router is designed to have a minimal impact on the performance of the computer that hosts it.

Installing the BlackBerry Router in the DMZ

The BlackBerry® Router is designed so that you can install outside your organization's firewall in the DMZ. You can configure the SRP connections so that all data traffic between the BlackBerry Dispatcher and BlackBerry Router bypasses the firewall. If you install the BlackBerry Router in the DMZ, you must make sure that the BlackBerry® Enterprise Server does not make a direct connection to the Internet.

If your organization uses an enterprise Wi-Fi® network, you can configure access points outside the firewall, and you can configure the BlackBerry Router in the DMZ to connect to the access points. If you configure the BlackBerry Router in the DMZ to connect to the access points, you do not require a VPN or layer 3 security method.

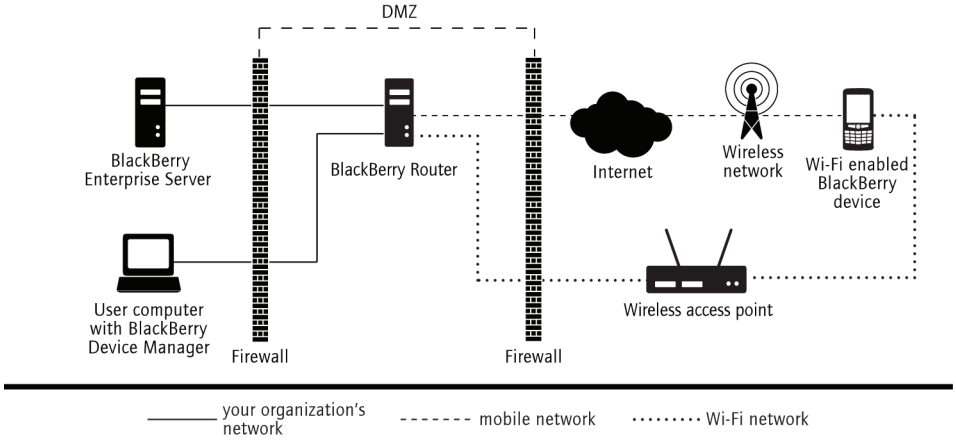

The BlackBerry Enterprise Server and BlackBerry devices encrypt all data traffic that passes through the BlackBerry Router, and the BlackBerry Enterprise Server and the BlackBerry® Infrastructure authenticate all connections to the BlackBerry Router. The BlackBerry Router is designed to protect the security of the BlackBerry Infrastructure because it does not store or transfer device transport keys if it is compromised.

System requirements: BlackBerry Router

To install the BlackBerry® Router on a computer that is separate from the computer that hosts the BlackBerry® Enterprise Server, any of the following operating systems:

- Windows Server® 2003 SP2 (32-bit or 64-bit)
- Windows Server 2003 R2 SP2 (32-bit or 64-bit)
- Windows Server 2008 SP2 (32-bit or 64-bit)
- Windows Server 2008 R2

Determining which Windows account to use to install and run a BlackBerry Router

You can install the BlackBerry® Router and run the BlackBerry Router service using any Windows® account.

If you install and run the BlackBerry Router service using the Windows account that the BlackBerry® Enterprise Server services use, you must make sure that the BlackBerry Router in the DMZ can connect to the internal Windows domain.

Install a standalone BlackBerry Router

A standalone BlackBerry® Router is a BlackBerry Router that is hosted by a computer that does not host any other BlackBerry® Enterprise Server components except the BlackBerry Controller. The BlackBerry Controller monitors the BlackBerry Router and restarts the BlackBerry Router if it stops responding.
Note: You cannot manage the BlackBerry Controller that monitors a standalone BlackBerry Router in the BlackBerry Administration Service. You must manage the BlackBerry Controller in the BlackBerry Configuration Panel on the computer that hosts the standalone BlackBerry Router.

1. Log in to the computer using the Windows® account that you want to use to run the BlackBerry Router.
2. In the BlackBerry Enterprise Server installation files, double-click **Setup.exe**. If your operating system is Windows Server® 2008, run **setup.exe** as an administrator.
3. In the **Setup type** dialog box, select **Install a standalone BlackBerry Router**.
4. When you receive a prompt, do not start the BlackBerry Router service until you configure the BlackBerry Router to connect to the BlackBerry Enterprise Server.

Test the connection from the BlackBerry Router to the BlackBerry Infrastructure

To make sure that the BlackBerry® Router can connect to the BlackBerry® Infrastructure, you can test the connection using the BBSRPTest tool that is included with the BlackBerry® Enterprise Server installation files. The BBSRPTest tool tries to connect to the BlackBerry Infrastructure using the SRP address and SRP port that you specified for the BlackBerry Infrastructure during the BlackBerry Router installation process.

1. On the computer that you want to test the connection to the BlackBerry Infrastructure on, complete one of the following actions:
   - If you are running a version of the BlackBerry Enterprise Server that is earlier than version 5.0 SP2, at a command prompt, navigate to *<BES_installation_files>*\Tools.
   - If you are running BlackBerry Enterprise Server 5.0 SP2 or later, at a command prompt, navigate to *<drive>*:\Program Files\Research In Motion\BlackBerry Enterprise Server.
2. Type **bbsrptest *<srp_address>* -*<port>***, where *<srp_address>* is the SRP address that you provided during the installation process and *<port>* is the SRP port number. For example, at the command line, type bbsrptest.exe –host server1.example.com –port 3101.

After you finish: If the test does not complete, use the Windows® Socket (WINSOCK) error code to diagnose the problem. For more information, visit http://msdn.microsoft.com to read article *Windows Socket Error Codes*.

Connecting to a BlackBerry Router 3

Perform the following tasks if you installed the BlackBerry® Router on a computer that is separate from the computer that hosts the BlackBerry® Enterprise Server. These tasks ensure that the BlackBerry Enterprise Server can connect to the BlackBerry Router.

Permit a BlackBerry Enterprise Server to connect to a remote BlackBerry Router

If you installed a BlackBerry® Router on a computer that is separate from the computer that hosts a BlackBerry® Enterprise Server, you must permit the BlackBerry Dispatcher that you installed with the BlackBerry Enterprise Server to connect to the BlackBerry Router. The BlackBerry Router that you installed on a separate computer can send data packets from the BlackBerry Enterprise Server to BlackBerry devices.

1. On the computer that hosts the BlackBerry Router, click **Start > Run**.
2. Type **regedit**.
3. Click **OK**.
4. Perform one of the following actions:
   - If you are running a 32-bit version of Windows®, navigate to \\HKEY_LOCAL_MACHINE\SOFTWARE\Research In Motion.
   - If you are running a 64-bit version of Windows, navigate to \\HKEY_LOCAL_MACHINE\SOFTWARE \WOW6432Node \Research In Motion.
5. Change the value of **AllowRemoteServices** to **1**.
6. If you want to change the port number that the BlackBerry Router uses to open connections to the BlackBerry Dispatcher, change the value of **ServicePort** to the port number that the BlackBerry Router should use, for example, port number 80. By default, the port number is 3101.
7. In the Windows Services, restart the BlackBerry Router service.

Connect a BlackBerry Enterprise Server to a remote BlackBerry Router

1. In the BlackBerry® Administration Service, on the **Servers and components** menu, expand **BlackBerry Solution topology > BlackBerry Domain > Component view > BlackBerry Enterprise Server**.
2. Click the BlackBerry® Enterprise Server instance or BlackBerry Enterprise Server pair that you want to assign the BlackBerry Router to.
3. Click **Edit instance**.
4. In the **Router address** section, type the FQDN of the computer that hosts the BlackBerry Router.
5. If the BlackBerry Router uses a port number other than port number 3101, in the **Port override** field, type the port number.
6. Click the **Add** icon.

7. Click **Save All**.
8. Restart the BlackBerry Enterprise Server using one of the following methods:
   - If you changed a BlackBerry Enterprise Server instance, on the **Instance** tab, click **Restart instance**.
   - If you changed a BlackBerry Enterprise Server pair, click one of the instances and on the **Instance** tab, click **Restart instance**. Repeat this step for the other instance.
   - In the Windows® Services, restart the BlackBerry Dispatcher.

Configure the BlackBerry Device Manager to use a BlackBerry Router inside the firewall

4

By default, the BlackBerry® Device Manager connection to the BlackBerry Router in the DMZ passes through the internal-facing firewall. To meet your organization's security requirements, you can configure the BlackBerry Device Manager to connect to the BlackBerry Router that you installed with the BlackBerry® Enterprise Server.

1. Perform one of the following actions:
   - Log in to the BlackBerry Administration Service or BlackBerry® Web Desktop Manager.
   - Start the BlackBerry® Desktop Software.
2. On the taskbar, right-click the **BlackBerry Device Manager** icon and select **Properties**.
3. On the **BlackBerry Router Configuration** tab, select **Turn on user defined routers**.
4. Click **Add router**.
5. In the **Address** field, type the IP address for the computer that hosts the BlackBerry Router.
6. In the **Port** field, type the port number that the BlackBerry Device Manager can use to connect to the BlackBerry Router (by default, port 4101).
7. Click **OK**.
8. Click **Apply**.

Connecting the BlackBerry Device Manager to the BlackBerry Router using a VPN

5

The BlackBerry® Device Manager can connect to the BlackBerry Router using a VPN from a remote location, for example, a hotel room. By default, if you install the BlackBerry Router in the DMZ, the BlackBerry Device Manager connects to the BlackBerry Router in the DMZ.

VPNs are designed to provide a secure connection to your organization's network, so installing the BlackBerry Router in the DMZ provides no additional security benefits.

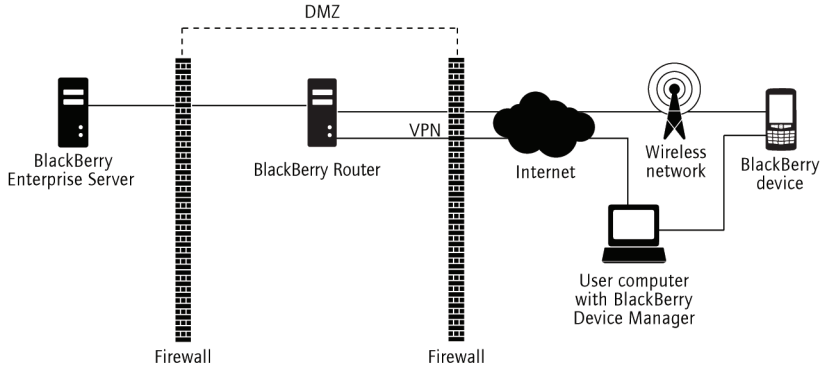

Configuring the BlackBerry Router to not use port 3101 to connect to the BlackBerry Dispatcher

6

You can configure the BlackBerry® Router to support PAT and accept connections from the BlackBerry Dispatcher on another port instead of the default port 3101. If you change the port number that a BlackBerry Router in the DMZ uses to connect to the BlackBerry Dispatcher, you must configure your organization's firewalls to permit the following actions:

- configure the internal-facing firewall to permit outbound initiated communication or bi-directional communication on the port
- configure the external-facing firewall to permit outbound initiated communication or bi-directional communication on the SRP port (3101)

For example, you can configure the BlackBerry Router in the DMZ to accept connections using port 80 from the BlackBerry Dispatcher and connect to the BlackBerry® Infrastructure using port 3101. You must configure the internal-facing firewall to allow outbound initiated communication or bi-directional communication using port 80. You must also configure the external-facing firewall to allow outbound initiated communication or bi-directional communication using port 3101.

If you select port 80 as the port that the BlackBerry Router and BlackBerry Dispatcher use to connect to each other, you must disable or uninstall Microsoft® IIS on the computer that hosts the BlackBerry Router to avoid any conflict on port 80.

BlackBerry Router high availability

7

To configure BlackBerry® Router high availability, you can configure a pool of two or more BlackBerry Router instances.

To configure a BlackBerry Router pool, you must add the identities of all BlackBerry Router instances to each BlackBerry® Enterprise Server that uses the same BlackBerry Configuration Database.

If you install two or more BlackBerry Router instances and a primary BlackBerry Enterprise Server loses its connection to the BlackBerry Router instance that it is using, it tries to connect to another BlackBerry Router instance in the pool. If the BlackBerry Enterprise Server can connect, it resends the service books to update the BlackBerry devices.

BlackBerry Router high availability in a small-scale environment

In a small-scale environment, you can install the BlackBerry® Router with the BlackBerry® Enterprise Server to minimize the number of computers that the BlackBerry Domain requires.

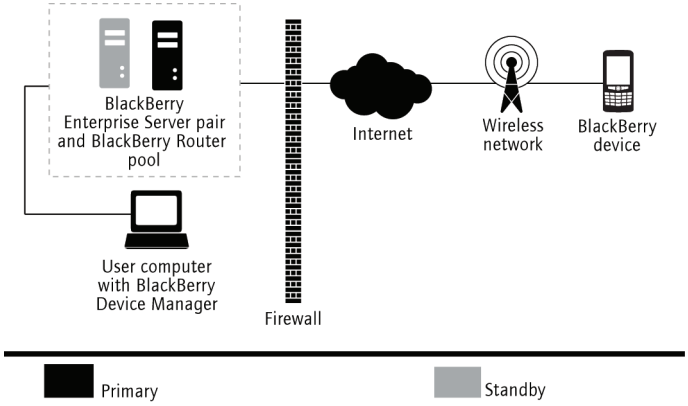

BlackBerry Router high availability in a large-scale environment

In a large-scale environment, you can install a BlackBerry® Router pool on computers that do not host the BlackBerry® Enterprise Server instances, and configure the BlackBerry Enterprise Server with a list of available BlackBerry Router instances using the BlackBerry Administration Service.

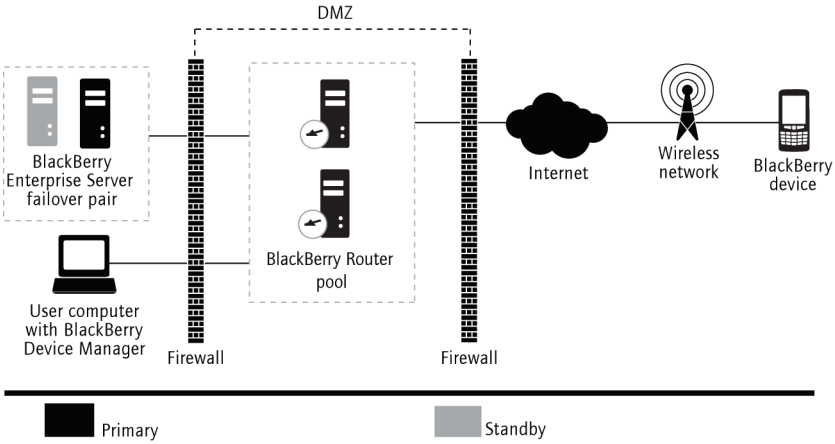

Best practice: Planning for BlackBerry Router high availability

To plan for BlackBerry® Router high availability, you can install two or more BlackBerry Router instances within the same network segment. You can install the BlackBerry Router instances with the primary and standby BlackBerry® Enterprise Server instances and on separate computers. The method that you use to configure the BlackBerry Router impacts how it fails over.

When you plan for BlackBerry Router high availability, you should consider the performance requirements and system requirements of the BlackBerry Enterprise Server and the BlackBerry Router and choose one of the following scenarios:

Scenario	Best practice
Install the BlackBerry Router instances with the BlackBerry Enterprise Server pair and include the BlackBerry Router with the BlackBerry Enterprise Server failover process.	If you install the BlackBerry Router with the primary and standby BlackBerry Enterprise Server, you can include the BlackBerry Router with the failover process of the BlackBerry Enterprise Server. If the BlackBerry Router or the primary BlackBerry Enterprise Server stops responding, the primary BlackBerry Enterprise Server and the BlackBerry Router fail over to the standby BlackBerry Enterprise Server with the other BlackBerry Router. By default, the BlackBerry Enterprise Server installation process installs the BlackBerry Router.

Scenario	Best practice
Install the BlackBerry Router instances with the BlackBerry Enterprise Server pair or on different computers and configure a BlackBerry Router pool.	If you want the primary BlackBerry Enterprise Server to use the BlackBerry Router installed with the standby BlackBerry Enterprise Server, or if you install the BlackBerry Router instances on computers that do not host the BlackBerry Enterprise Server, you can configure a BlackBerry Router pool. The primary BlackBerry Enterprise Server can connect to any of the BlackBerry Router instances. If a BlackBerry Router instance stops responding, the primary BlackBerry Enterprise Server connects to another BlackBerry Router in the pool. You can create a BlackBerry Router pool in the DMZ. If you create a BlackBerry Router pool in the DMZ, and you want to install the BlackBerry Router in the protected network, you can create another BlackBerry Router pool in the protected network. If you want to create a BlackBerry Router pool on computers that do not host the BlackBerry Enterprise Server pair, turn off the BlackBerry Router instances that you installed with the BlackBerry Enterprise Server pair.

Scenario: What happens after the BlackBerry Router stops responding

If the BlackBerry® Router stops responding, the primary BlackBerry® Enterprise Server responds differently if it can connect to another BlackBerry Router in the pool.

These responses assume that you have configured a BlackBerry Router pool, that the BlackBerry Enterprise Server and the BlackBerry® Infrastructure are running, and that the BlackBerry Router instance cannot restore itself:

Response of the primary BlackBerry Enterprise Server when it can connect to another BlackBerry Router

1. The primary BlackBerry Enterprise Server loses its SRP connection.
2. BlackBerry devices that connect to the BlackBerry Router using serial bypass (least cost routing) lose their connection.
3. Wi-Fi® enabled BlackBerry devices that connect to the BlackBerry Router over the Wi-Fi network lose their connection.
4. The primary BlackBerry Enterprise Server tries unsuccessfully to reopen the connection to the BlackBerry Router instance that it was using when the connection was lost.
5. The primary BlackBerry Enterprise Server tries to connect to another BlackBerry Router instance in the pool.

   The primary BlackBerry Enterprise Server can connect to another BlackBerry Router and the connection to the BlackBerry Infrastructure is restored.

6. The primary BlackBerry Enterprise Server resends service books to update the BlackBerry devices.

Response of the primary BlackBerry Enterprise Server when it cannot connect to another BlackBerry Router

1. The primary BlackBerry Enterprise Server loses its SRP connection.
2. BlackBerry devices that connect to the BlackBerry Router using serial bypass (least cost routing) lose their connection.
3. Wi-Fi® enabled BlackBerry devices that connect to the BlackBerry Router over the Wi-Fi network lose their connection.
4. The primary BlackBerry Enterprise Server tries unsuccessfully to reopen the connection to the BlackBerry Router instance that it was using when the connection was lost.
5. The primary BlackBerry Enterprise Server tries to connect to another BlackBerry Router instance in the pool unsuccessfully.
6. The primary BlackBerry Enterprise Server lowers its health score.

   The health score of the BlackBerry Enterprise Server falls below the failover threshold.
7. The standby BlackBerry Enterprise Server checks its health score to determine if it is above the promotion threshold.
   One of the following events occurs:
   - If the health score of the standby BlackBerry Enterprise Server is above the promotion threshold, the standby BlackBerry Enterprise Server tries to open a connection to a BlackBerry Router instance and promote itself.
   - If the health score of the standby BlackBerry Enterprise Server is below the promotion threshold, the standby BlackBerry Enterprise Server cannot promote itself and you must resolve the issue.

Create a BlackBerry Router pool for high availability

To configure BlackBerry® Router high availability, you can create a BlackBerry Router pool for each BlackBerry® Enterprise Server by assigning multiple BlackBerry Router instances to the BlackBerry Enterprise Server. The BlackBerry Enterprise Server determines which BlackBerry Router instance to connect to by trying to connect to the first BlackBerry Router instance in the pool list. If the BlackBerry Enterprise Server cannot connect to the first BlackBerry Router instance in the list, it tries to connect to each BlackBerry Router in sequence until a connection succeeds.

For more information, see the *BlackBerry Enterprise Server Planning Guide*.

1. In the BlackBerry Administration Service, on the **Servers and components** menu, click **BlackBerry Solution topology > BlackBerry Domain > Component view > BlackBerry Enterprise Server**.
2. Click the name of the BlackBerry Enterprise Server or the name of the BlackBerry Enterprise Server pair that you want to assign the BlackBerry Router pool to.
3. Click **Edit instance**.
4. In the **SRP Address** section, type the FQDN of the computer that hosts the BlackBerry Router instance.

5. If the BlackBerry Router instance uses a port number other than port number 3101, in the **Port override** field, type the port number.
6. Click the **Add** icon.
7. Repeat steps 4 to 6 for each instance that you want to add to the pool.
8. Click **Save all**.
9. Restart the BlackBerry Enterprise Server using one of the following methods:
   - If you are changing a BlackBerry Enterprise Server instance, on the **Instance** tab, click **Restart instance**.
   - If you are changing a BlackBerry Enterprise Server pair, click on one of the instances. On the **Instance** tab, click **Restart instance**. Repeat this step for the other instance.
   - In the Windows® Services, restart the BlackBerry Dispatcher.
10. Repeat steps 2 to 9 for each BlackBerry Enterprise Server instance in your organization's environment that you want to have use a BlackBerry Router pool.

Related resources

8

Resource	Description
BlackBerry Enterprise Solution Security Technical Overview	• Understanding how the BlackBerry® Enterprise Solution is designed to help protect data that is in transit between BlackBerry devices and a BlackBerry® Enterprise Server or your organization's LAN • Managing security settings for devices
BlackBerry Enterprise Server Installation and Configuration Guide	• Understanding system requirements for the BlackBerry Router • Installing a standalone BlackBerry Router • Connecting to a remote BlackBerry Router
BlackBerry Enterprise Server Administration Guide	• Assigning devices to user accounts • Creating a BlackBerry Router pool for high availability • Activating devices over an enterprise Wi-Fi® network
BlackBerry Enterprise Server Planning Guide	• Understanding BlackBerry Router high availability

Glossary

9

device transport key

The device transport key (formerly known as the master encryption key) is unique to a BlackBerry device. The BlackBerry device and BlackBerry® Enterprise Server use the device transport key to encrypt the message keys.

DMZ

A demilitarized zone (DMZ) is a neutral subnetwork outside of an organization's firewall. It exists between the trusted LAN of the organization and the untrusted external wireless network and public Internet.

FQDN

fully qualified domain name

IIS

Internet Information Services

IP address

An Internet Protocol (IP) address is an identification number that each computer or mobile device uses when it sends or receives information over a network, such as the Internet. This identification number identifies the specific computer or mobile device on the network.

LAN

local area network

PAT

Port Address Translation

PIN

personal identification number

SNMP

Simple Network Management Protocol

SRP

Server Routing Protocol

SRP authentication

SRP authentication is an authentication method that the BlackBerry® Enterprise Server and BlackBerry® Infrastructure use to authenticate with each other.

TCP

Transmission Control Protocol

UDP

User Datagram Protocol

VPN

virtual private network

Provide feedback

10

To provide feedback on this deliverable, visit www.blackberry.com/docsfeedback.

Legal notice

11

©2011 Research In Motion Limited. All rights reserved. BlackBerry®, RIM®, Research In Motion®, and related trademarks, names, and logos are the property of Research In Motion Limited and are registered and/or used in the U.S. and countries around the world.

Microsoft, Windows, and Windows Server are trademarks of Microsoft Corporation. Wi-Fi is a trademark of the Wi-Fi Alliance. All other trademarks are the property of their respective owners.

This documentation including all documentation incorporated by reference herein such as documentation provided or made available at www.blackberry.com/go/docs is provided or made accessible "AS IS" and "AS AVAILABLE" and without condition, endorsement, guarantee, representation, or warranty of any kind by Research In Motion Limited and its affiliated companies ("RIM") and RIM assumes no responsibility for any typographical, technical, or other inaccuracies, errors, or omissions in this documentation. In order to protect RIM proprietary and confidential information and/or trade secrets, this documentation may describe some aspects of RIM technology in generalized terms. RIM reserves the right to periodically change information that is contained in this documentation; however, RIM makes no commitment to provide any such changes, updates, enhancements, or other additions to this documentation to you in a timely manner or at all.

This documentation might contain references to third-party sources of information, hardware or software, products or services including components and content such as content protected by copyright and/or third-party web sites (collectively the "Third Party Products and Services"). RIM does not control, and is not responsible for, any Third Party Products and Services including, without limitation the content, accuracy, copyright compliance, compatibility, performance, trustworthiness, legality, decency, links, or any other aspect of Third Party Products and Services. The inclusion of a reference to Third Party Products and Services in this documentation does not imply endorsement by RIM of the Third Party Products and Services or the third party in any way.

EXCEPT TO THE EXTENT SPECIFICALLY PROHIBITED BY APPLICABLE LAW IN YOUR JURISDICTION, ALL CONDITIONS, ENDORSEMENTS, GUARANTEES, REPRESENTATIONS, OR WARRANTIES OF ANY KIND, EXPRESS OR IMPLIED, INCLUDING WITHOUT LIMITATION, ANY CONDITIONS, ENDORSEMENTS, GUARANTEES, REPRESENTATIONS OR WARRANTIES OF DURABILITY, FITNESS FOR A PARTICULAR PURPOSE OR USE, MERCHANTABILITY, MERCHANTABLE QUALITY, NON-INFRINGEMENT, SATISFACTORY QUALITY, OR TITLE, OR ARISING FROM A STATUTE OR CUSTOM OR A COURSE OF DEALING OR USAGE OF TRADE, OR RELATED TO THE DOCUMENTATION OR ITS USE, OR PERFORMANCE OR NON-PERFORMANCE OF ANY SOFTWARE, HARDWARE, SERVICE, OR ANY THIRD PARTY PRODUCTS AND SERVICES REFERENCED HEREIN, ARE HEREBY EXCLUDED. YOU MAY ALSO HAVE OTHER RIGHTS THAT VARY BY STATE OR PROVINCE. SOME JURISDICTIONS MAY NOT ALLOW THE EXCLUSION OR LIMITATION OF IMPLIED WARRANTIES AND CONDITIONS. TO THE EXTENT PERMITTED BY LAW, ANY IMPLIED WARRANTIES OR CONDITIONS RELATING TO THE DOCUMENTATION TO THE EXTENT THEY CANNOT BE EXCLUDED AS SET OUT ABOVE, BUT CAN BE LIMITED, ARE HEREBY LIMITED TO NINETY (90) DAYS FROM THE DATE YOU FIRST ACQUIRED THE DOCUMENTATION OR THE ITEM THAT IS THE SUBJECT OF THE CLAIM.

TO THE MAXIMUM EXTENT PERMITTED BY APPLICABLE LAW IN YOUR JURISDICTION, IN NO EVENT SHALL RIM BE LIABLE FOR ANY TYPE OF DAMAGES RELATED TO THIS DOCUMENTATION OR ITS USE, OR PERFORMANCE OR NON-PERFORMANCE OF ANY SOFTWARE, HARDWARE, SERVICE, OR ANY THIRD PARTY PRODUCTS AND SERVICES REFERENCED HEREIN INCLUDING WITHOUT LIMITATION ANY OF THE FOLLOWING DAMAGES: DIRECT, CONSEQUENTIAL, EXEMPLARY, INCIDENTAL, INDIRECT, SPECIAL, PUNITIVE, OR AGGRAVATED DAMAGES, DAMAGES

FOR LOSS OF PROFITS OR REVENUES, FAILURE TO REALIZE ANY EXPECTED SAVINGS, BUSINESS INTERRUPTION, LOSS OF BUSINESS INFORMATION, LOSS OF BUSINESS OPPORTUNITY, OR CORRUPTION OR LOSS OF DATA, FAILURES TO TRANSMIT OR RECEIVE ANY DATA, PROBLEMS ASSOCIATED WITH ANY APPLICATIONS USED IN CONJUNCTION WITH RIM PRODUCTS OR SERVICES, DOWNTIME COSTS, LOSS OF THE USE OF RIM PRODUCTS OR SERVICES OR ANY PORTION THEREOF OR OF ANY AIRTIME SERVICES, COST OF SUBSTITUTE GOODS, COSTS OF COVER, FACILITIES OR SERVICES, COST OF CAPITAL, OR OTHER SIMILAR PECUNIARY LOSSES, WHETHER OR NOT SUCH DAMAGES WERE FORESEEN OR UNFORESEEN, AND EVEN IF RIM HAS BEEN ADVISED OF THE POSSIBILITY OF SUCH DAMAGES.

TO THE MAXIMUM EXTENT PERMITTED BY APPLICABLE LAW IN YOUR JURISDICTION, RIM SHALL HAVE NO OTHER OBLIGATION, DUTY, OR LIABILITY WHATSOEVER IN CONTRACT, TORT, OR OTHERWISE TO YOU INCLUDING ANY LIABILITY FOR NEGLIGENCE OR STRICT LIABILITY.

THE LIMITATIONS, EXCLUSIONS, AND DISCLAIMERS HEREIN SHALL APPLY: (A) IRRESPECTIVE OF THE NATURE OF THE CAUSE OF ACTION, DEMAND, OR ACTION BY YOU INCLUDING BUT NOT LIMITED TO BREACH OF CONTRACT, NEGLIGENCE, TORT, STRICT LIABILITY OR ANY OTHER LEGAL THEORY AND SHALL SURVIVE A FUNDAMENTAL BREACH OR BREACHES OR THE FAILURE OF THE ESSENTIAL PURPOSE OF THIS AGREEMENT OR OF ANY REMEDY CONTAINED HEREIN; AND (B) TO RIM AND ITS AFFILIATED COMPANIES, THEIR SUCCESSORS, ASSIGNS, AGENTS, SUPPLIERS (INCLUDING AIRTIME SERVICE PROVIDERS), AUTHORIZED RIM DISTRIBUTORS (ALSO INCLUDING AIRTIME SERVICE PROVIDERS) AND THEIR RESPECTIVE DIRECTORS, EMPLOYEES, AND INDEPENDENT CONTRACTORS.

IN ADDITION TO THE LIMITATIONS AND EXCLUSIONS SET OUT ABOVE, IN NO EVENT SHALL ANY DIRECTOR, EMPLOYEE, AGENT, DISTRIBUTOR, SUPPLIER, INDEPENDENT CONTRACTOR OF RIM OR ANY AFFILIATES OF RIM HAVE ANY LIABILITY ARISING FROM OR RELATED TO THE DOCUMENTATION.

Prior to subscribing for, installing, or using any Third Party Products and Services, it is your responsibility to ensure that your airtime service provider has agreed to support all of their features. Some airtime service providers might not offer Internet browsing functionality with a subscription to the BlackBerry® Internet Service. Check with your service provider for availability, roaming arrangements, service plans and features. Installation or use of Third Party Products and Services with RIM's products and services may require one or more patent, trademark, copyright, or other licenses in order to avoid infringement or violation of third party rights. You are solely responsible for determining whether to use Third Party Products and Services and if any third party licenses are required to do so. If required you are responsible for acquiring them. You should not install or use Third Party Products and Services until all necessary licenses have been acquired. Any Third Party Products and Services that are provided with RIM's products and services are provided as a convenience to you and are provided "AS IS" with no express or implied conditions, endorsements, guarantees, representations, or warranties of any kind by RIM and RIM assumes no liability whatsoever, in relation thereto. Your use of Third Party Products and Services shall be governed by and subject to you agreeing to the terms of separate licenses and other agreements applicable thereto with third parties, except to the extent expressly covered by a license or other agreement with RIM.

Certain features outlined in this documentation require a minimum version of BlackBerry® Enterprise Server, BlackBerry® Desktop Software, and/or BlackBerry® Device Software.

The terms of use of any RIM product or service are set out in a separate license or other agreement with RIM applicable thereto. NOTHING IN THIS DOCUMENTATION IS INTENDED TO SUPERSEDE ANY EXPRESS WRITTEN AGREEMENTS OR WARRANTIES PROVIDED BY RIM FOR PORTIONS OF ANY RIM PRODUCT OR SERVICE OTHER THAN THIS DOCUMENTATION.

Certain features outlined in this documentation might require additional development or Third Party Products and Services for access to corporate applications.

Research In Motion Limited
295 Phillip Street
Waterloo, ON N2L 3W8
Canada

Research In Motion UK Limited
Centrum House
36 Station Road
Egham, Surrey TW20 9LF
United Kingdom

Published in Canada